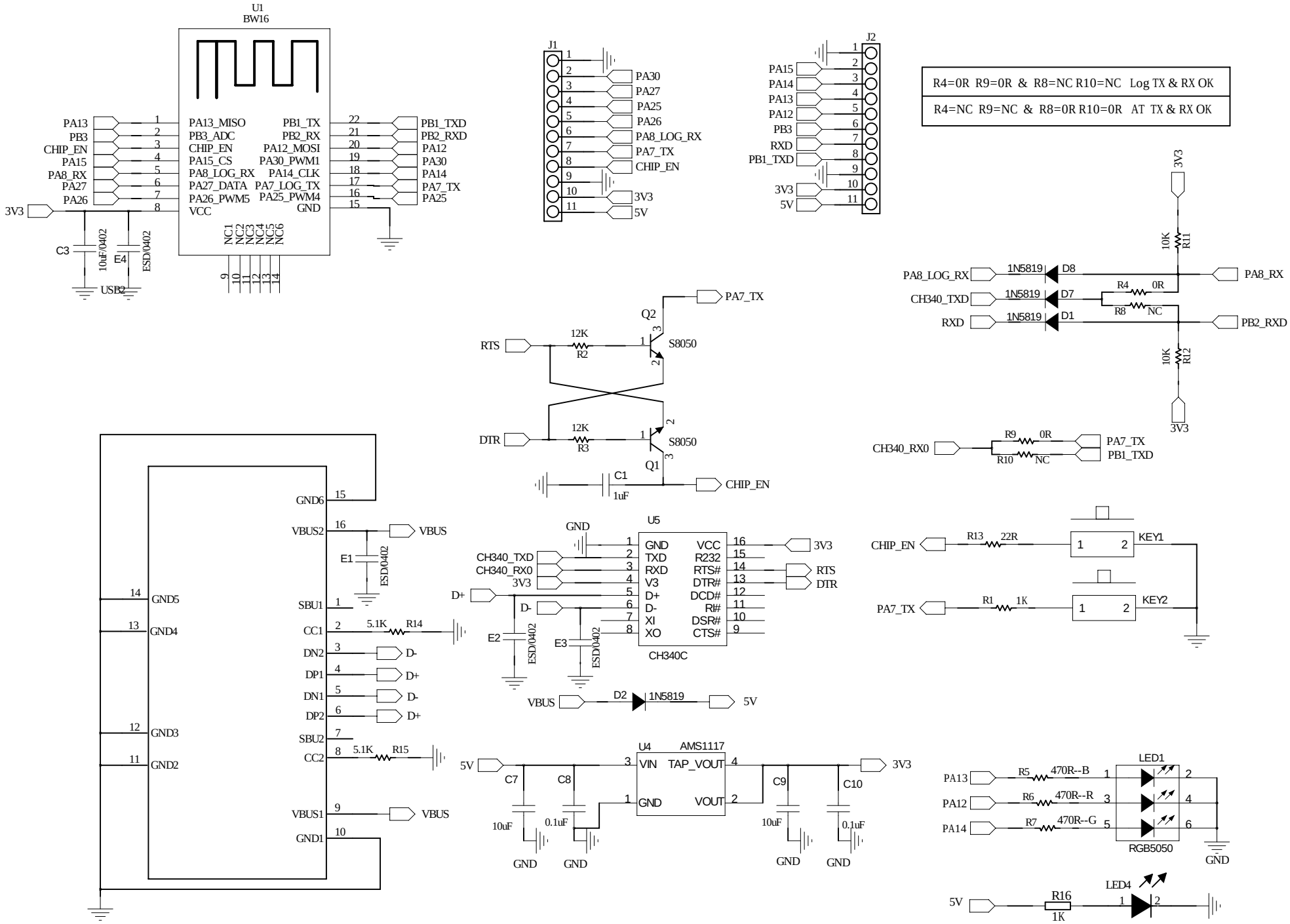
U1
BW16
PA13_MISO
PB3_ADC
CHIP_EN
PA15_CS
PA8_LOG_RX
PA27_DATA
PA26_PWM5
VCC
PB1_TX
PB2_RX
PA12_MOSI
PA30_PWM1
PA14_CLK
PA7_LOG_TX
PA25_PWM4
GND
NC1 NC2 NC3 NC4 NC5 NC6
PA13 PB3 CHIP_EN PA15 PA8_RX PA27 PA26
3V3
PB1_TXD PB2_RXD PA12 PA30 PA14 PA7_TX PA25
C3 10uF/0402
E4 ESD/0402
USB2
J1
PA30 PA27 PA25 PA26 PA8_LOG_RX PA7_TX CHIP_EN 3V3 5V
J2
PA15 PA14 PA13 PA12 PB3 RXD PB1_TXD 3V3 5V
R4=0R R9=0R & R8=NC R10=NC Log TX & RX OK
R4=NC R9=NC & R8=0R R10=0R AT TX & RX OK
3V3
10K R11
PA8_LOG_RX 1N5819 D8 PA8_RX
CH340_TXD 1N5819 D7 R4 0R
RXD 1N5819 D1 R8 NC PB2_RXD
10K R12
3V3
PA7_TX
Q2
RTS 12K R2 S8050
DTR 12K R3 S8050
Q1
C1 1uF
CHIP_EN
CH340_RX0 R9 0R PA7_TX
R10 NC PB1_TXD
GND6 15
VBUS2 16 VBUS
E1 ESD/0402
SBU1 1
CC1 2 5.1K R14
DN2 3 D-
DP1 4 D+
DN1 5 D-
DP2 6 D+
SBU2 7
CC2 8 5.1K R15
VBUS1 9 VBUS
GND1 10
GND5 14
GND4 13
GND3 12
GND2 11
GND
U5
CH340_TXD
CH340_RX0
3V3
D+
D-
E2 ESD/0402
E3 ESD/0402
GND TXD RXD V3 D+ D- XI XO
VCC R232 RTS# DTR# DCD# RI# DSR# CTS#
3V3
RTS
DTR
CH340C
VBUS D2 1N5819 5V
CHIP_EN R13 22R KEY1
PA7_TX R1 1K KEY2
5V
C7 10uF
C8 0.1uF
U4 AMS1117
VIN TAP_VOUT
GND VOUT
C9 10uF
C10 0.1uF
3V3
PA13 R5 470R--B
PA12 R6 470R--R
PA14 R7 470R--G
LED1
RGB5050
GND
5V R16 1K
LED4