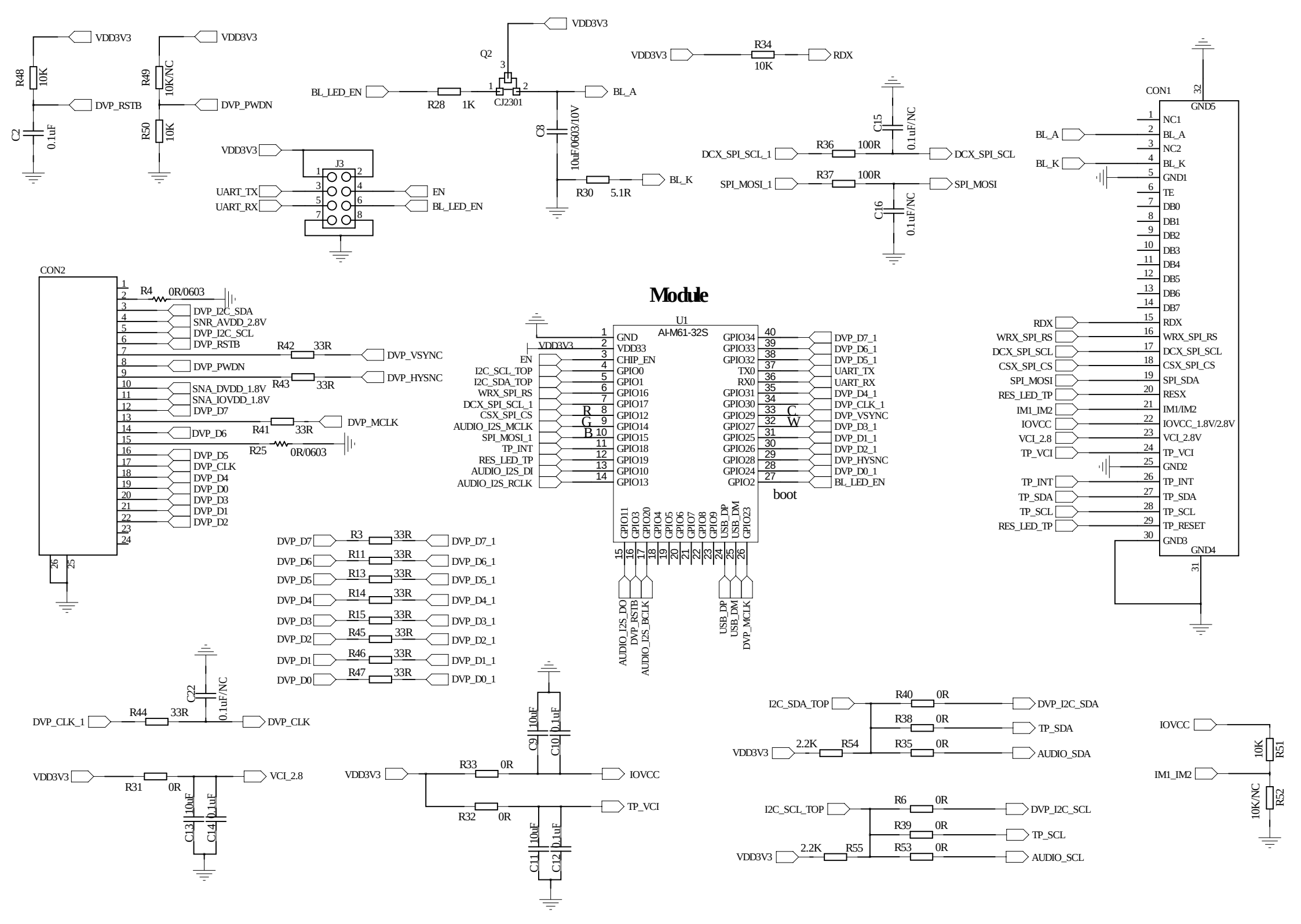
Module
U1
AI-M61-32S
CON1
CON2
J3
Q2
CJ2301
VDD3V3
DVP_RSTB
DVP_PWDN
R48 10K
R49 10K/NC
R50 10K
C2 0.1uF
BL_LED_EN
R28 1K
BL_A
C8 10uF/0603/10V
R30 5.1R
BL_K
UART_TX
UART_RX
EN
R34 10K
RDX
C15 0.1uF/NC
C16 0.1uF/NC
DCX_SPI_SCL_1
R36 100R
DCX_SPI_SCL
SPI_MOSI_1
R37 100R
SPI_MOSI
R4 0R/0603
DVP_I2C_SDA
SNR_AVDD_2.8V
DVP_I2C_SCL
DVP_RSTB
R42 33R
DVP_VSYNC
DVP_PWDN
R43 33R
DVP_HYSNC
SNA_DVDD_1.8V
SNA_IOVDD_1.8V
DVP_D7
R41 33R
DVP_MCLK
DVP_D6
R25 0R/0603
DVP_D5
DVP_CLK
DVP_D4
DVP_D0
DVP_D3
DVP_D1
DVP_D2
DVP_D7 R3 33R DVP_D7_1
DVP_D6 R11 33R DVP_D6_1
DVP_D5 R13 33R DVP_D5_1
DVP_D4 R14 33R DVP_D4_1
DVP_D3 R15 33R DVP_D3_1
DVP_D2 R45 33R DVP_D2_1
DVP_D1 R46 33R DVP_D1_1
DVP_D0 R47 33R DVP_D0_1
GND
VDD33
CHIP_EN
GPIO0
GPIO1
GPIO16
GPIO17
GPIO12
GPIO14
GPIO15
GPIO18
GPIO19
GPIO10
GPIO13
GPIO34
GPIO33
GPIO32
TX0
RX0
GPIO31
GPIO30
GPIO29
GPIO27
GPIO25
GPIO26
GPIO28
GPIO24
GPIO2
I2C_SCL_TOP
I2C_SDA_TOP
WRX_SPI_RS
DCX_SPI_SCL_1
CSX_SPI_CS
AUDIO_I2S_MCLK
SPI_MOSI_1
TP_INT
RES_LED_TP
AUDIO_I2S_DI
AUDIO_I2S_RCLK
DVP_D7_1
DVP_D6_1
DVP_D5_1
UART_TX
UART_RX
DVP_D4_1
DVP_CLK_1
DVP_VSYNC
DVP_D3_1
DVP_D1_1
DVP_D2_1
DVP_HYSNC
DVP_D0_1
BL_LED_EN
boot
GPIO11
GPIO3
GPIO20
GPIO4
GPIO5
GPIO6
GPIO7
GPIO8
GPIO9
USB_DP
USB_DM
GPIO23
AUDIO_I2S_DO
DVP_RSTB
AUDIO_I2S_BCLK
USB_DP
USB_DM
DVP_MCLK
R
G
B
C
W
GND5
NC1
BL_A
NC2
BL_K
GND1
TE
DB0
DB1
DB2
DB3
DB4
DB5
DB6
DB7
RDX
WRX_SPI_RS
DCX_SPI_SCL
CSX_SPI_CS
SPI_SDA
RESX
IM1/IM2
IOVCC_1.8V/2.8V
VCI_2.8V
TP_VCI
GND2
TP_INT
TP_SDA
TP_SCL
TP_RESET
GND3
GND4
C22 0.1uF/NC
DVP_CLK_1
R44 33R
DVP_CLK
VDD3V3
R31 0R
VCI_2.8
C13 10uF
C14 0.1uF
C9 10uF
C10 0.1uF
R33 0R
IOVCC
R32 0R
TP_VCI
C11 10uF
C12 0.1uF
I2C_SDA_TOP
R40 0R
DVP_I2C_SDA
R38 0R
TP_SDA
2.2K R54
R35 0R
AUDIO_SDA
I2C_SCL_TOP
R6 0R
DVP_I2C_SCL
R39 0R
TP_SCL
2.2K R55
R53 0R
AUDIO_SCL
IOVCC
IM1_IM2
R51 10K
R52 10K/NC

POWER

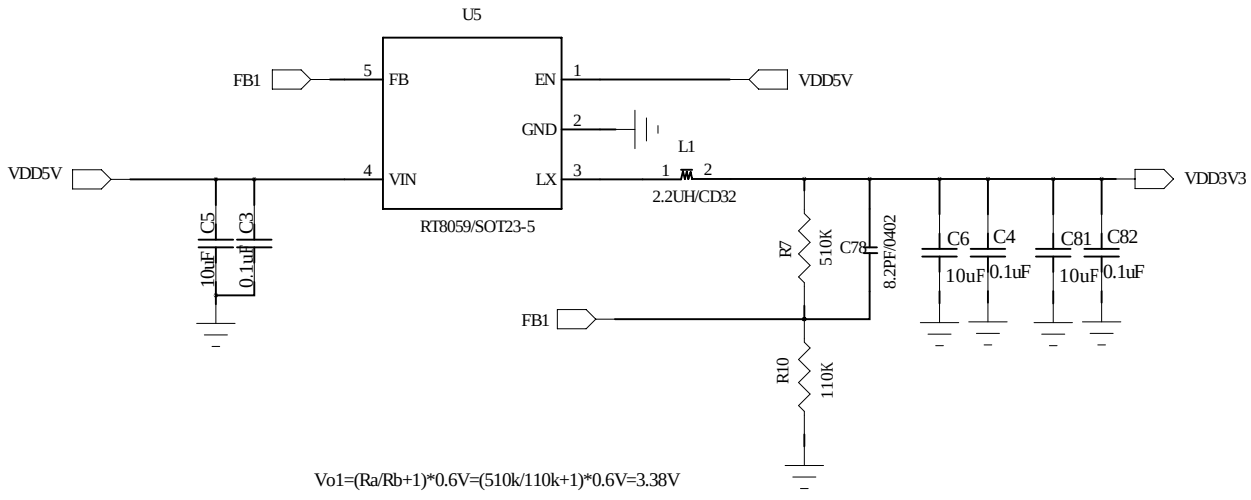

Vo1=(Ra/Rb+1)*0.6V=(510k/110k+1)*0.6V=3.38V

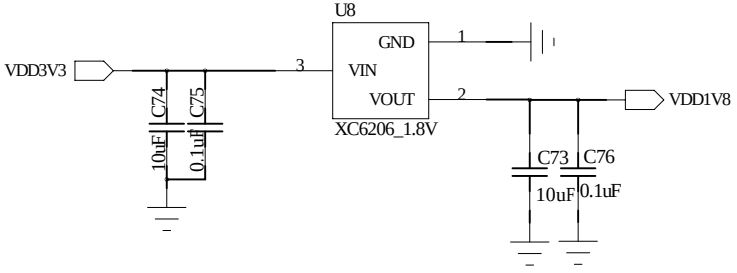

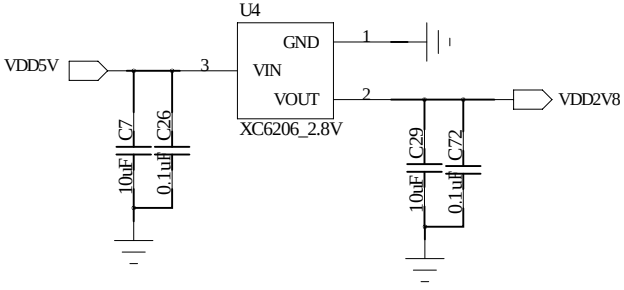

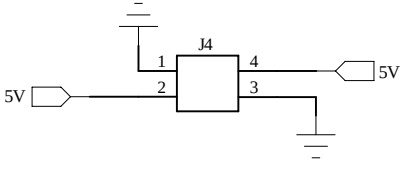

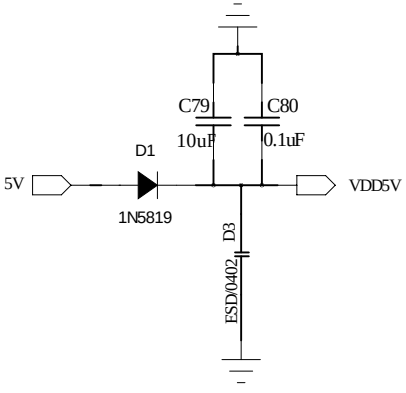

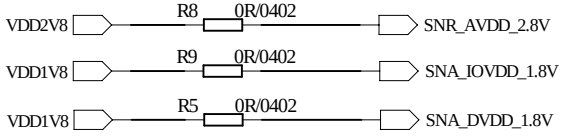

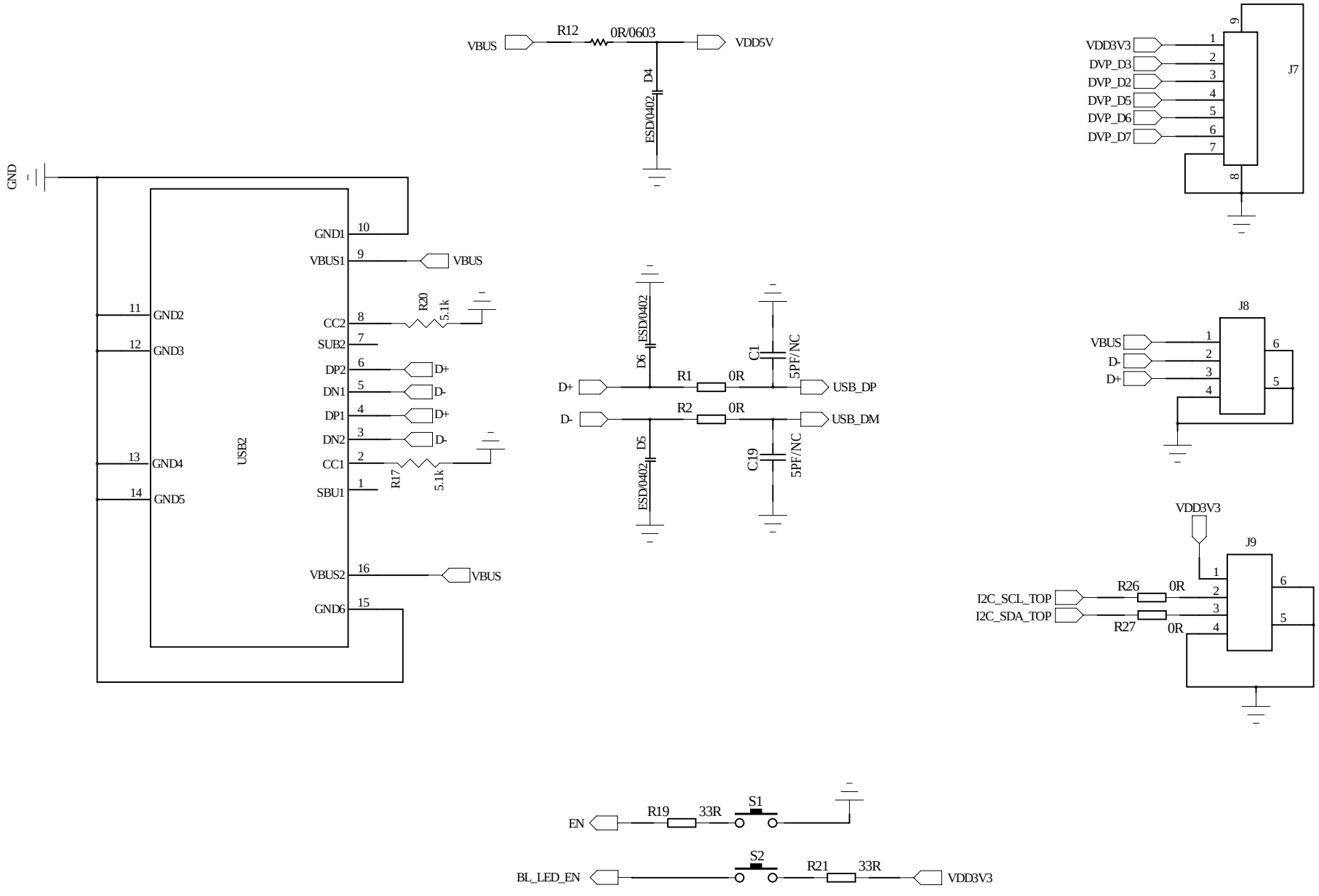
VBUS
R12
0R/0603
VDD5V
D4
ESD/0402
VDD3V3
DVP_D3
DVP_D2
DVP_D5
DVP_D6
DVP_D7
J7
GND
USB2
GND1
VBUS1
GND2
GND3
CC2
SUB2
DP2
DN1
DP1
DN2
CC1
SBU1
GND4
GND5
VBUS2
GND6
R20
5.1k
R17
D+
D-
D6
D5
R1
R2
0R
C1
C19
5PF/NC
USB_DP
USB_DM
J8
J9
I2C_SCL_TOP
I2C_SDA_TOP
R26
R27
EN
R19
33R
S1
BL_LED_EN
S2
R21

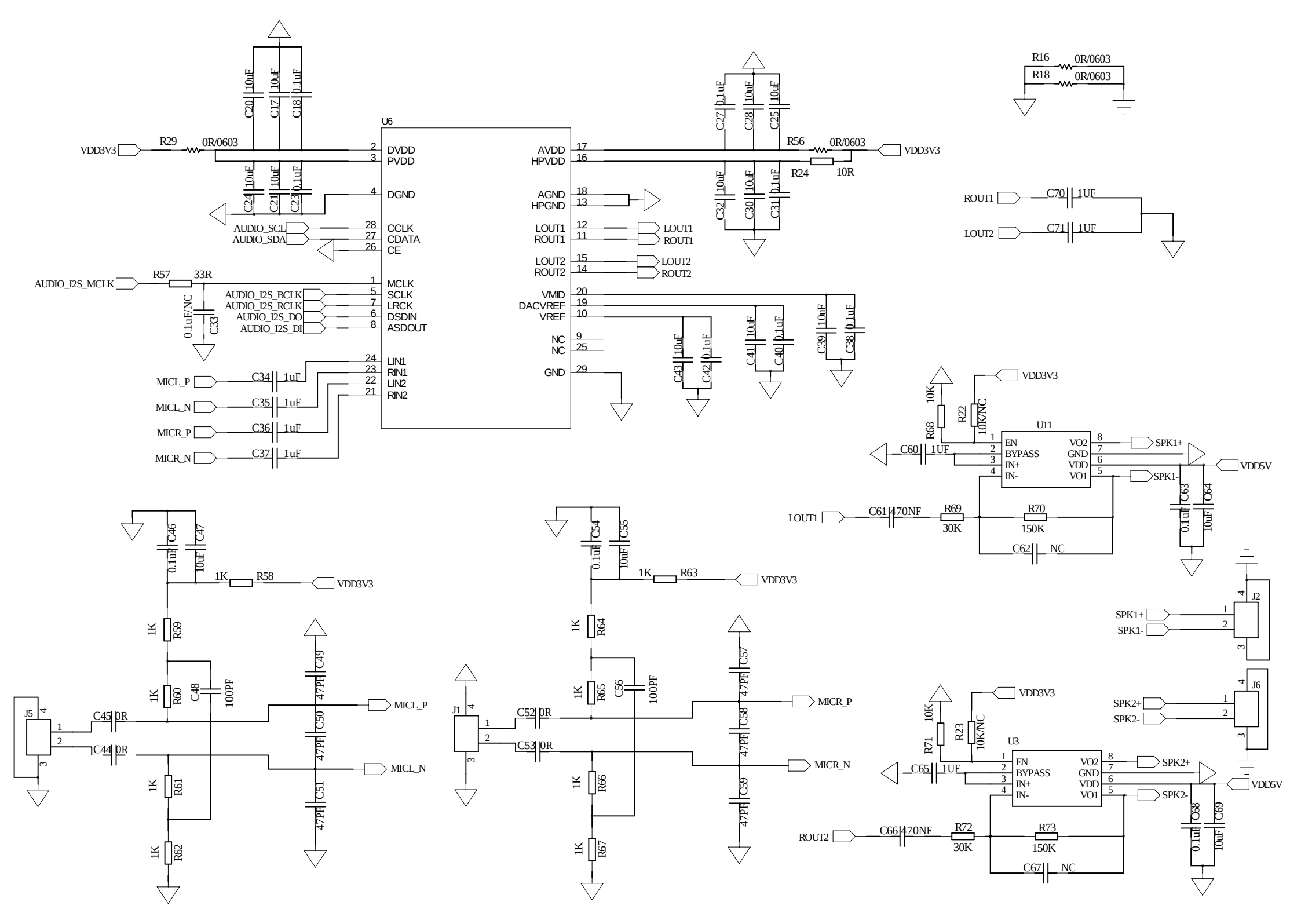
U6
VDD3V3
R29
0R/0603
C20 10uF
C17 10uF
C18 0.1uF
C24 10uF
C21 10uF
C23 0.1uF
DVDD
PVDD
DGND
AUDIO_SCL
AUDIO_SDA
CCLK
CDATA
CE
AUDIO_I2S_MCLK
R57
33R
0.1uF/NC
C33
AUDIO_I2S_BCLK
AUDIO_I2S_RCLK
AUDIO_I2S_DO
AUDIO_I2S_DI
MCLK
SCLK
LRCK
DSDIN
ASDOUT
MICL_P
MICL_N
MICR_P
MICR_N
C34 1uF
C35 1uF
C36 1uF
C37 1uF
LIN1
RIN1
LIN2
RIN2
AVDD
HPVDD
AGND
HPGND
LOUT1
ROUT1
LOUT2
ROUT2
VMID
DACVREF
VREF
NC
GND
C27 0.1uF
C28 10uF
C25 10uF
C32 10uF
C30 10uF
C31 0.1uF
R56
0R/0603
R24
10R
C43 10uF
C42 0.1uF
C41 10uF
C40 0.1uF
C39 10uF
C38 0.1uF
R16
0R/0603
R18
0R/0603
ROUT1
LOUT2
C70 1UF
C71 1UF
U11
EN
BYPASS
IN+
IN-
VO2
GND
VDD
VO1
SPK1+
SPK1-
VDD5V
R68 10K
R22 10K/NC
C60 1UF
C63 0.1uF
C64 10uF
LOUT1
C61 470NF
R69 30K
R70 150K
C62 NC
J2
SPK1+
SPK1-
C46 0.1uF
C47 10uF
1K R58
VDD3V3
1K R59
1K R60
C48 100PF
1K R61
1K R62
J5
C45 0R
C44 0R
C49 47PF
C50 47PF
C51 47PF
MICL_P
MICL_N
C54 0.1uF
C55 10uF
1K R63
VDD3V3
1K R64
1K R65
C56 100PF
1K R66
1K R67
J1
C52 0R
C53 0R
C57 47PF
C58 47PF
C59 47PF
MICR_P
MICR_N
J6
SPK2+
SPK2-
R71 10K
R23 10K/NC
VDD3V3
U3
EN
BYPASS
IN+
IN-
VO2
GND
VDD
VO1
SPK2+
SPK2-
VDD5V
C65 1UF
C68 0.1uF
C69 10uF
ROUT2
C66 470NF
R72 30K
R73 150K
C67 NC

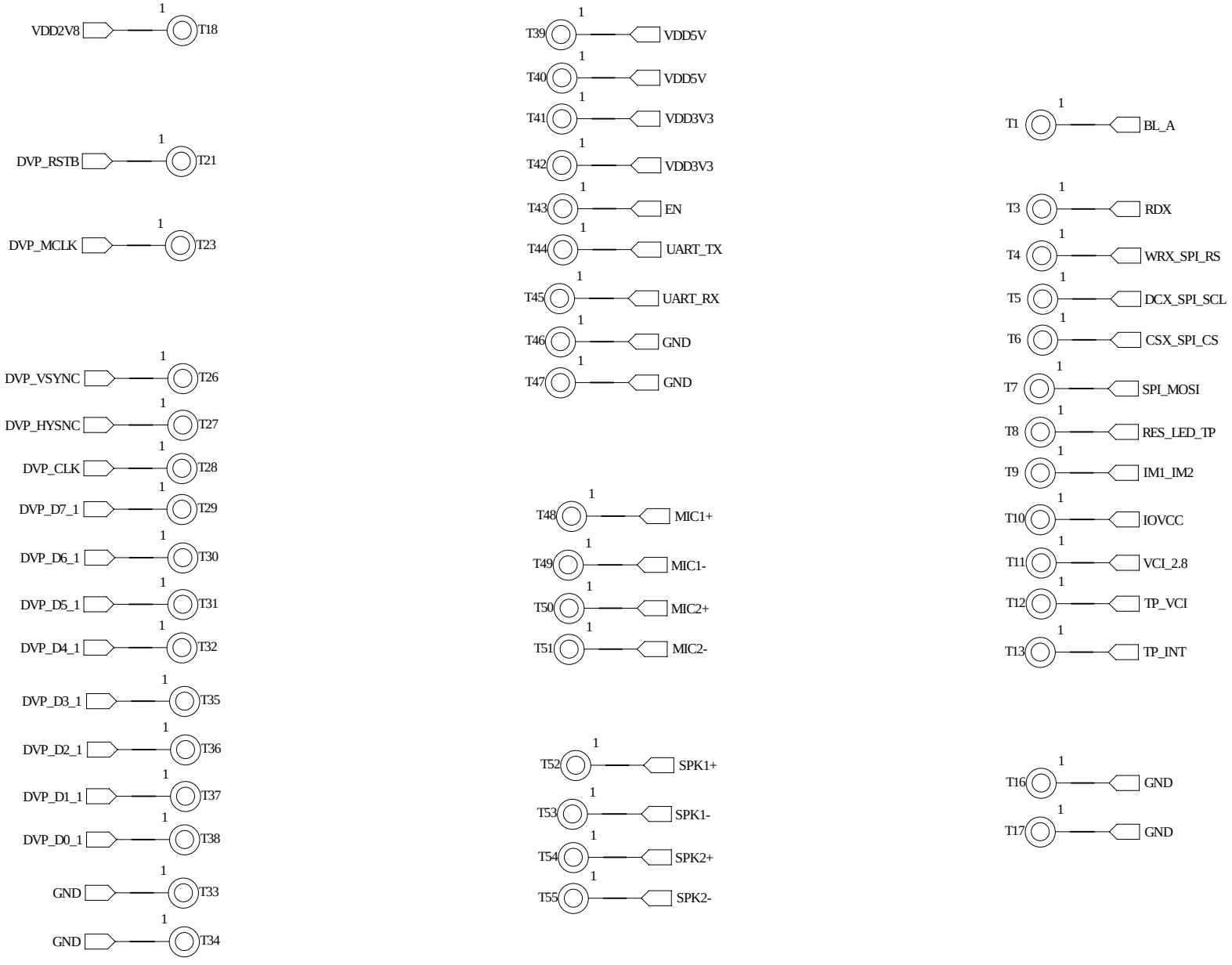
VDD2V8
T18
DVP_RSTB
T21
DVP_MCLK
T23
DVP_VSYNC
T26
DVP_HYSNC
T27
DVP_CLK
T28
DVP_D7_1
T29
DVP_D6_1
T30
DVP_D5_1
T31
DVP_D4_1
T32
DVP_D3_1
T35
DVP_D2_1
T36
DVP_D1_1
T37
DVP_D0_1
T38
GND
T33
GND
T34
T39
VDD5V
T40
VDD5V
T41
VDD3V3
T42
VDD3V3
T43
EN
T44
UART_TX
T45
UART_RX
T46
GND
T47
GND
T48
MIC1+
T49
MIC1-
T50
MIC2+
T51
MIC2-
T52
SPK1+
T53
SPK1-
T54
SPK2+
T55
SPK2-
T1
BL_A
T3
RDX
T4
WRX_SPI_RS
T5
DCX_SPI_SCL
T6
CSX_SPI_CS
T7
SPI_MOSI
T8
RES_LED_TP
T9
IM1_IM2
T10
IOVCC
T11
VCI_2.8
T12
TP_VCI
T13
TP_INT
T16
GND
T17
GND

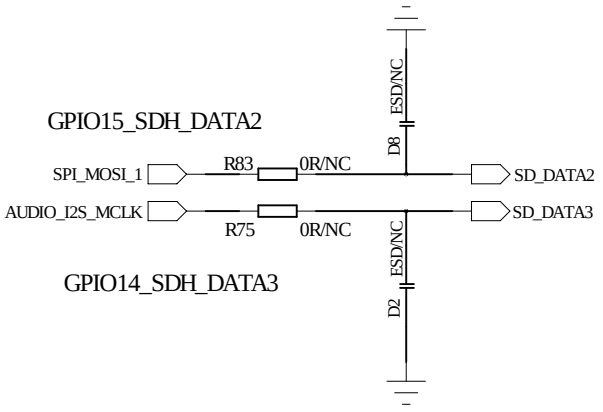
GPIO15_SDH_DATA2
SPI_MOSI_1
R83
0R/NC
D8
ESD/NC
SD_DATA2
AUDIO_I2S_MCLK
R75
0R/NC
SD_DATA3
GPIO14_SDH_DATA3
D2
ESD/NC

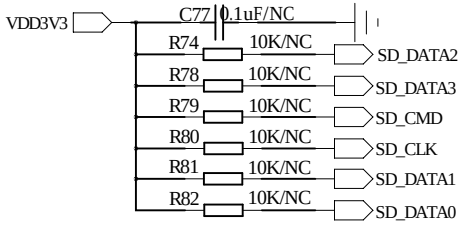
VDD3V3
C77
0.1uF/NC
R74
10K/NC
SD_DATA2
R78
10K/NC
SD_DATA3
R79
10K/NC
SD_CMD
R80
10K/NC
SD_CLK
R81
10K/NC
SD_DATA1
R82
10K/NC
SD_DATA0

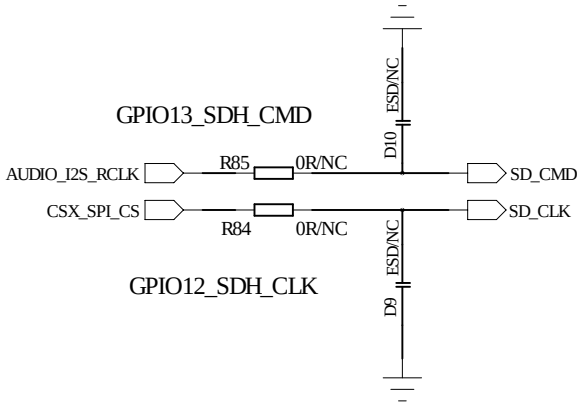
GPIO13_SDH_CMD
AUDIO_I2S_RCLK
R85
0R/NC
D10
ESD/NC
SD_CMD
CSX_SPI_CS
R84
0R/NC
SD_CLK
GPIO12_SDH_CLK
D9
ESD/NC

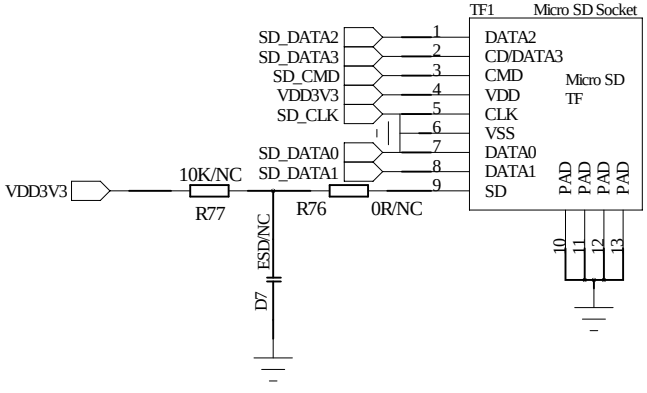
TF1
Micro SD Socket
SD_DATA2
SD_DATA3
SD_CMD
VDD3V3
SD_CLK
SD_DATA0
SD_DATA1
1
2
3
4
5
6
7
8
9
DATA2
CD/DATA3
CMD
VDD
CLK
VSS
DATA0
DATA1
SD
Micro SD
TF
PAD
PAD
PAD
PAD
10
11
12
13
VDD3V3
10K/NC
R77
R76
0R/NC
ESD/NC
D7

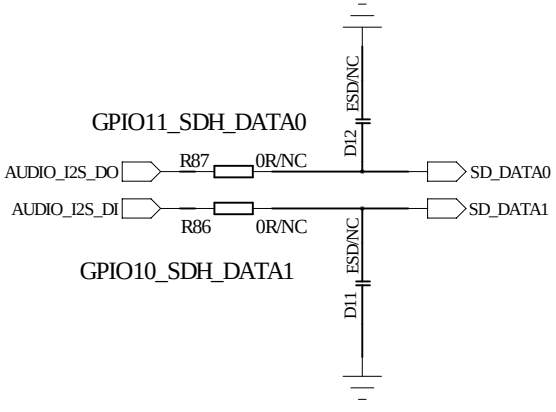
GPIO11_SDH_DATA0
AUDIO_I2S_DO
R87
0R/NC
D12
ESD/NC
SD_DATA0
AUDIO_I2S_DI
R86
0R/NC
SD_DATA1
GPIO10_SDH_DATA1
D11
ESD/NC