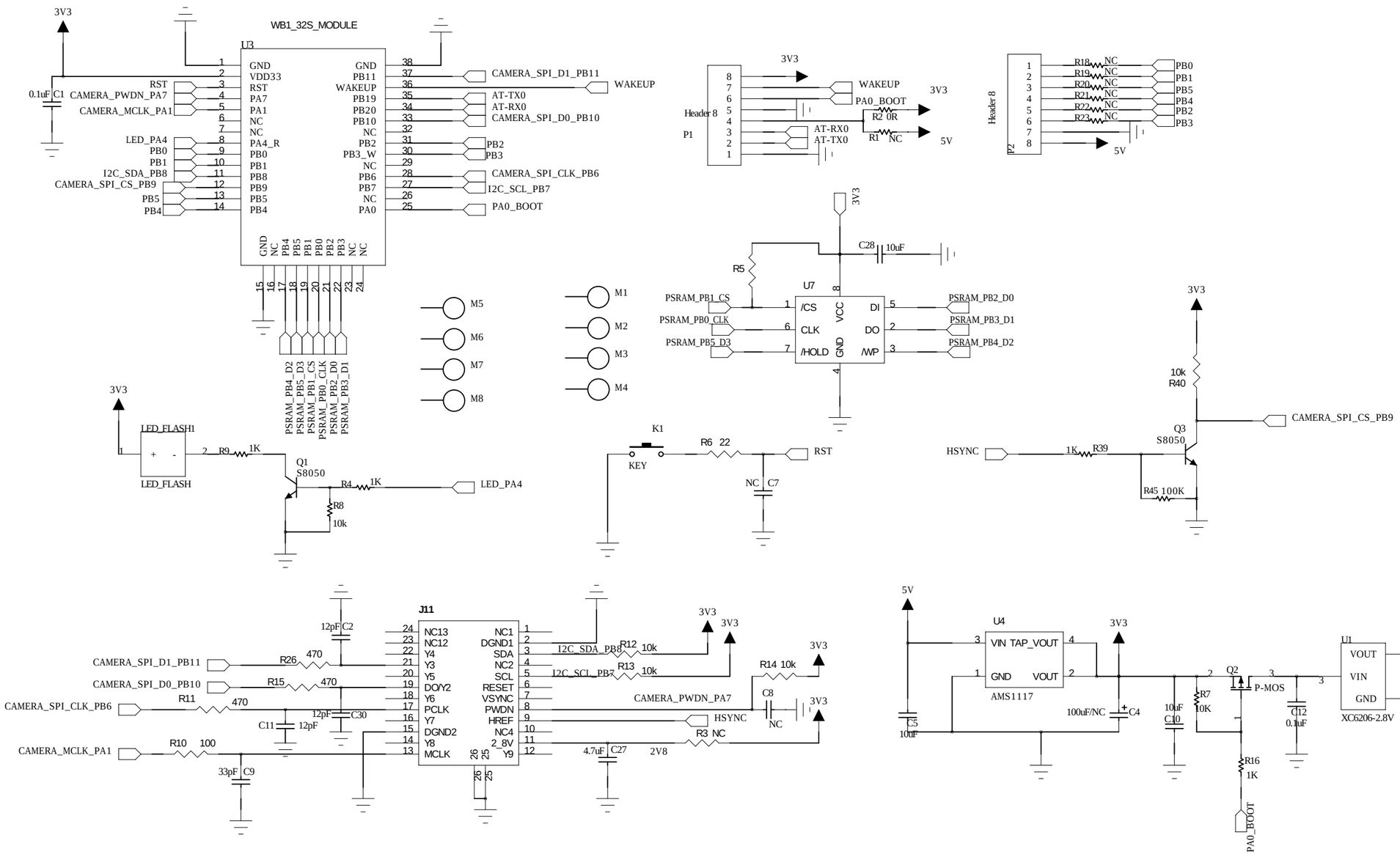
WB1_32S_MODULE
U3
3V3
0.1uF C1
RST
CAMERA_PWDN_PA7
CAMERA_MCLK_PA1
LED_PA4
PB0
PB1
I2C_SDA_PB8
CAMERA_SPI_CS_PB9
PB5
PB4
GND
VDD33
RST
PA7
PA1
NC
PA4_R
PB0
PB1
PB8
PB9
PB5
PB4
GND
PB11
WAKEUP
PB19
PB20
PB10
NC
PB2
PB3_W
NC
PB6
PB7
NC
PA0
CAMERA_SPI_D1_PB11
WAKEUP
AT-TX0
AT-RX0
CAMERA_SPI_D0_PB10
PB2
PB3
CAMERA_SPI_CLK_PB6
I2C_SCL_PB7
PA0_BOOT
GND NC PB4 PB5 PB1 PB0 PB2 PB3 NC NC
PSRAM_PB4_D2
PSRAM_PB5_D3
PSRAM_PB1_CS
PSRAM_PB0_CLK
PSRAM_PB2_D0
PSRAM_PB3_D1
M5
M6
M7
M8
M1
M2
M3
M4
Header 8
P1
3V3
WAKEUP
PA0_BOOT
R2 0R
AT-RX0
AT-TX0
R1 NC
5V
Header 8
P2
R18 NC
R19 NC
R20 NC
R21 NC
R22 NC
R23 NC
PB0
PB1
PB5
PB4
PB2
PB3
5V
3V3
C28 10uF
R5
U7
PSRAM_PB1_CS
PSRAM_PB0_CLK
PSRAM_PB5_D3
/CS
CLK
/HOLD
VCC
GND
DI
DO
/WP
PSRAM_PB2_D0
PSRAM_PB3_D1
PSRAM_PB4_D2
3V3
10k
R40
CAMERA_SPI_CS_PB9
Q3
S8050
HSYNC
1K R39
R45 100K
3V3
LED_FLASH1
LED_FLASH
R9 1K
Q1
S8050
R4 1K
LED_PA4
R8
10k
K1
KEY
R6 22
RST
NC C7

J11
12pF C2
CAMERA_SPI_D1_PB11
R26 470
CAMERA_SPI_D0_PB10
R15 470
CAMERA_SPI_CLK_PB6
R11 470
12pF C30
C11 12pF
CAMERA_MCLK_PA1
R10 100
33pF C9
NC13
NC12
Y4
Y3
Y5
DO/Y2
Y6
PCLK
Y7
DGND2
Y8
MCLK
NC1
DGND1
SDA
NC2
SCL
RESET
VSYNC
PWDN
HREF
NC4
2_8V
Y9
I2C_SDA_PB8
R12 10k
I2C_SCL_PB7
R13 10k
3V3
3V3
R14 10k
3V3
CAMERA_PWDN_PA7
C8
NC
3V3
HSYNC
R3 NC
4.7uF C27
2V8

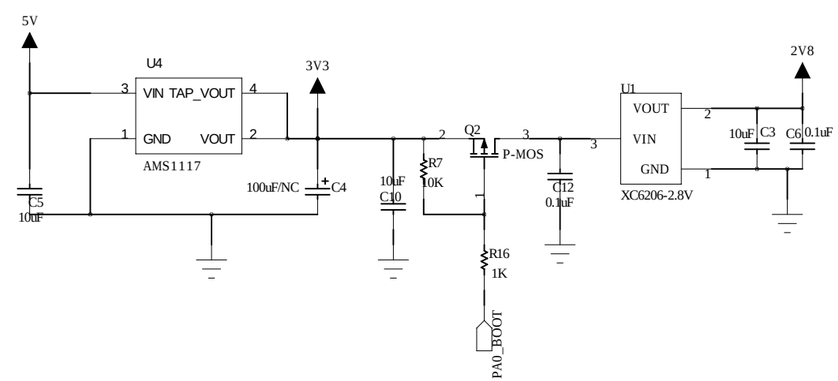
5V
C5
10uF
U4
VIN TAP_VOUT
GND VOUT
AMS1117
3V3
100uF/NC C4
10uF
C10
R7
10K
Q2
P-MOS
C12
0.1uF
R16
1K
PA0_BOOT
U1
VOUT
VIN
GND
XC6206-2.8V
2V8
10uF C3
C6 0.1uF